A S C

SPECIALTY CONCEPTS, INC.

PHOTOVOLTAIC CHARGE CONTROLLER

The ASC photovoltaic battery charge controller is ideal for 1-4 panel systems. This rugged unit holds the record for high reliability since 1981. The ASC has a simple, low component count design that is 100% solid state and is completely sealed against harsh environments. Lightning protection and a blocking diode are included. The ASC is UL listed and is FM approved for hazardous locations.

The ASC is a negative ground, switching shunt controller available in 12 and 24 volt units up to 16 amps, and 6 volt units for 4 amps. The terminal block accepts up to 12 gauge wire.

FM APPROVED

ASC (Standard 12 amp)

FEATURES

CHARGE REGULATION

- 1-16 amp charge current, 12 volt
- 8 or 16 amp charge current, 24 volt
- 4 amp charge current, 6 volt
- Switching shunt, pulse charging
- Remote temperature compensation (option)
- Adjustable set-points (option)

LOW VOLTAGE LOAD DISCONNECT (LVD) (option)

- 10 amp LVD Relay
- Contacts for generator start or alarm

DESIGN FEATURES

- Encapsulated for protection
- 100% solid state charge control
- Reverse leakage protection - blocking diode
- Lightning protection
- Input noise suppression
- Low power consumption
- Simple, rugged circuitry

MONITORING & MOUNTING

- Charging light
- LVD activated light (with LVD)
- Surface mount
- Suitable for outdoor mounting

OPERATION

SWITCHING SHUNT REGULATION - The ASC will allow maximum array current to flow into the battery through a blocking diode, lighting the "CHARGING" light (LED), until the battery voltage reaches the charge termination set-point. At this point, a shunt transistor will turn on, shorting out the solar array, turning off the "CHARGING" LED and halting any further battery charging. When the battery voltage drops to the charge resumption set-point, the shunt transistor will turn off and charging will resume. The result is that when battery capacity is low, charging will be continuous. As the battery charges up, current will pass into the battery for shorter and shorter periods, until at full charge, it will pulse current into the battery to achieve and maintain full charge.

FOR LARGER ARRAYS - The ASC can be wired in parallel to sub-arrays. This method provides the added reliability of independent, redundant charge controls and allows for sequential charging.

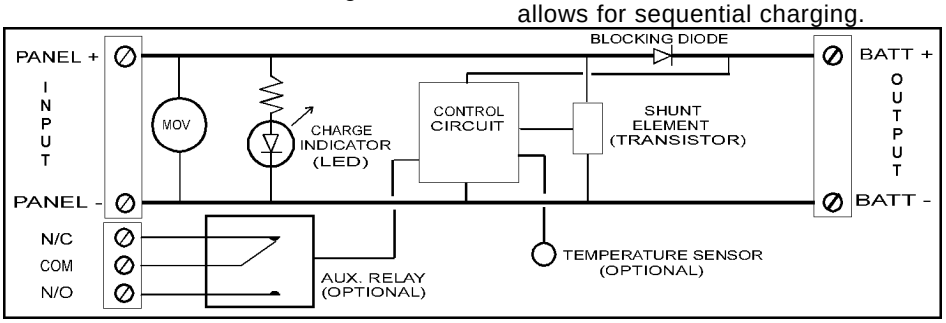

Block Diagram - ASC

OPTIONS DESCRIPTION

A - Temperature Compensation :
Temperature compensation is generally recommended for sealed batteries or where batteries are expected to experience temperature variations of more than ± 10° from 25°C during periods of charging. A small temperature sensor on a 10 foot lead monitors battery temperature and adjusts the charging thresholds according to battery temperature. The rate of compensation is -5mv/°C per battery cell from 25°C.

E - Low Voltage Disconnect (LVD) / Generator Start :
The ASC can be provided with an auxiliary relay. This relay can be used to protect the battery from low-voltage damage by disconnecting loads or by signaling a standby generator to start or stop battery charging. The relay is rated for 10 amps and is not available on 6 volt or 1 amp units. This option provides the common, the normally open and the normally closed voltage free contacts of the relay. The relay consumes 30 ma when activated and is activated at 1.92 ± .03 volts/cell and deactivated at 2.17 ± .03 volts/cell. A separate terminal block is provided for connection.

F - Adjustability :
The ASC may be ordered with the adjustment pot available to change the charging set-points if required. (Not available on units with E-option: LVD / Gen. start)

A S C - S p e c i f i c a t i o n s

PARAMETERS	UNITS	NOMINAL CURRENTS				
		1 amp	4 amp	8 amp	12 amp	16 amp
Short Circuit Current, Continuous	(Amps)	1.5	4	8	12	16
Short Circuit Current, Max (60 seconds)	(Amps)	1.9	5	10.5	15.5	21

PARAMETERS	UNITS	NOMINAL VOLTAGES		
		6 v	12 v	24 v
Load Current, Continuous (1)(3)	(Amps)	N/A	10	10
Load Current, Max (60 seconds) (1)(3)(5)	(Amps)	N/A	13	13
Array Voltage, Max Voc	(Volts)	26	26	46
Operating Voltage @ Battery, Minimum				
Charge Control	(Volts)	0	0	0
Load Disconnect (1)	(Volts)	4.2	8.5	17
Quiescent Current	(Milliamps)	10	10	10
Current Consumption, Charging, Typ.	(Milliamps)	15	15	15
Current Consumption,				
Load Disconnected, Typ. (1)(4)	(Milliamps)	N/A	40	40
Voltage Drop, Array to Battery, Typ.	(Volts)	.30	.30	.30
Voltage Drop, Array to Battery, Max.	(Volts)	.55	.55	.55
Voltage Drop, Battery to Load, Typ. (1)	(Volts) @ 10 amps	.06	.06	.06
Charge Termination	(Volts)	7.1 ± .1	14.3 ± .2	28.6 ± .4
Charge Resumption	(Volts)	6.65 ± .2	13.5 ± .3	27.0 ± .6
Load Disconnect (LVD) (1)	(Volts)	N/A	11.5 ± .2	23.0 ± .4
Load Reconnect (1)	(Volts)	N/A	13.0 ± .3	26.0 ± .6
Operating Temp. Range	(°C)	-40 to 50	-40 to 50	-40 to 50
Storage Temp. Range	(°C)	-55 to 85	-55 to 85	-55 to 85
Temperature Comp. Coef. (from 25°C) (2)	(Volts/°C)	-.015	-.03	-.06

Notes:
(1) Low-voltage disconnect option
(2) Temperature compensation option
(3) Non-inductive.
(4) LVD relay energized, red L.E.D. on, typical value.
(5) Carry only, Non-switching

P A R T N U M B E R I N G K E Y

EXAMPLE:

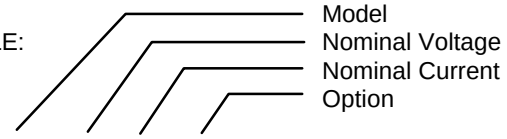

ASC- 12 / 8 - A

MODEL	NOMINAL VOLTAGE	NOMINAL CURRENT	OPTIONS
ASC	6	1	A - Temperature Compensation
	12	4	E - Low-voltage Disconnect (LVD)/
	24	8	Generator Start
		12	F - Adjustable Charge
		16	Termination Set-point

NOTES:
6 volt units available in 4 amp version only.
6 volt unit not available with option E
12 volt / 1 amp unit not available with options
24 volt units available in 8 and 16 amp versions
Options E and F cannot be ordered together

Specifications and product availability subject to change without notice.

D I M E N S I O N S

In Inches (cm)
Values in [brackets] are for 16 amp units.

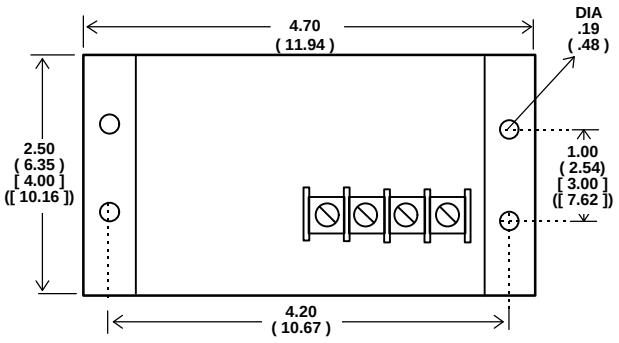

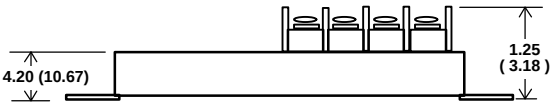

Shipping weight: .5 lbs. (.25 Kgs.)
[16 amp: 1 lbs. (.5 Kgs.)]

S P E C I A L T Y C O N C E P T S , I N C .

8954 MASON AVE., CHATSWORTH, CA 91311 USA PH: (818) 998-5238, FAX: (818) 998-5253